1" Trim (Fascia)

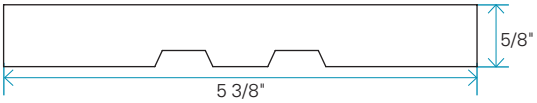

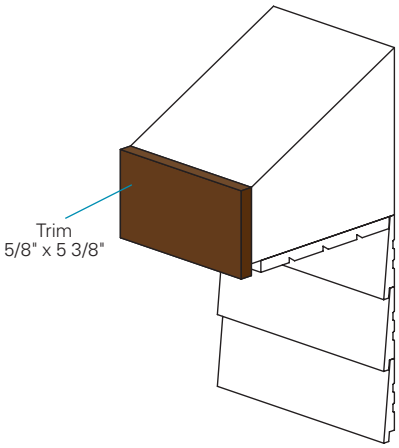

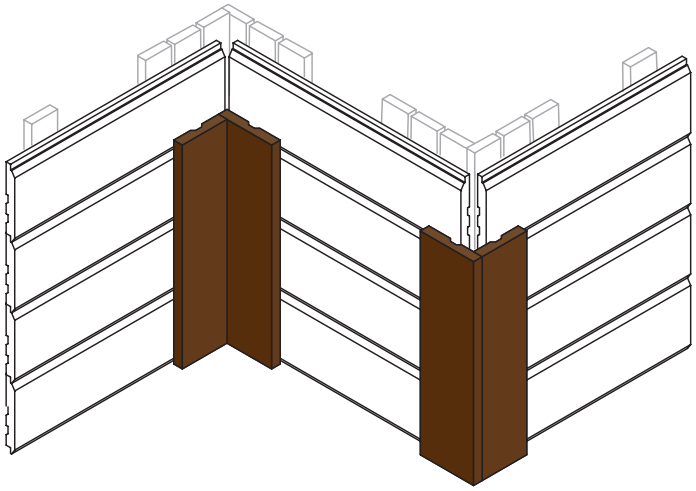

NOMINAL DIMENSIONS	FINISH	ACTUAL DIMENSIONS	INSTALLATION
3"	Textured and URBAHN® brushed-face	5/8" x 2 3/8"	Horizontally and vertically
4"	Textured and URBAHN® brushed-face	5/8" x 3 3/8"	Horizontally and vertically
5"	Textured and URBAHN® brushed-face	5/8" x 4 1/2"	Horizontally and vertically
6"	Textured and URBAHN® brushed-face	5/8" x 5 3/8"	Horizontally and vertically
7"	Textured	5/8" x 6 1/2"	Horizontally and vertically
8"	Textured	5/8" x 7"	Horizontally and vertically
9"	Textured	5/8" x 8 1/4"	Horizontally and vertically
10"	Textured	5/8" x 9"	Horizontally and vertically

General Specifications

SPECIES

- Spruce - Fir (SPF) / Sound tight knot

MANUFACTURING

- Kiln-dried (KD) between 12% to 16% humidity.
- Available in a textured finish and Maibec URBAHN® brushed-face finish.

PACKAGING

- Random lengths 6' to 16' in bundles.

AVAILABLE COLORS

Textured finish

- Selection of solid colors (2 coats).
- Maibec Natural tones.

Maibec URBAHN® brushed-face finish

- Selection of solid colors (2 coats).

FACTORY-STAINING

- The stain is factory-coated on all six sides in a controlled environment for maximum stain absorption and retention. This also provides increased protection from the damaging effects of the sun and the elements.
- Low-volatile organic compounds (VOCs) water-based stains.

FSC® mixed sources certified siding available upon request.

For exterior use only.

1" Trim (Fascia) (cont'd)

Installation System

NAILS

- Use Maibec 2" hot-dipped zinc galvanized ring shank nail with textured head, factory-stained to match the siding color.
- Use 2 1/2" coil nails for pneumatic nailers for trim. Make sure to check nail gun compatibility. Not color-matched.
- Use unstained stainless steel grade 316 ringed nails if installing regular Maibec trim in Coastal regions†.
- A plastic hammer end cap is provided to protect the wood.
- 10 lbs needed per 1,000 fbm.

Installation

Maibec® trim must be installed over a standard 16" on centre stud built wall with OSB (Oriented Strand Board) sheathing or plywood, and an approved weather barrier. Use 1" x 4" furring strips (1" x 3" strips are acceptable). They must be kiln-dried, straight, without splits or nail holes to ensure a proper fastening base. Consult the applicable building codes in your region. See the Installation guide available on our website at maibec.com/us under the SUPPORT tab.

How to Calculate

Add a minimum of 5% to the amount for losses due to cutting.

WARRANTY* - SIDING TEXTURED FACE

25 YEARS against wood decay

10 YEARS on solid stain 2 coats — COASTAL REGIONS†: 8 YEARS

8 YEARS on natural tones stain — COASTAL REGIONS†: 6 YEARS

3 YEARS on labor

WARRANTY* - SIDING BRUSHED FACE / MAIBEC URBAHN®

25 YEARS against wood decay

10 YEARS on solid stain 2 coats — COASTAL REGIONS†: 8 YEARS

3 YEARS on labor

* SOME RESTRICTIONS APPLY. SEE DETAILED WARRANTIES.

† COASTAL REGIONS ARE DESCRIBED AS LOCATED LESS THAN 3,000 FEET FROM THE COASTLINE.

® REGISTERED TRADE-MARK PROPERTY OF MAIBEC INC. © COPYRIGHT - MAIBEC INC.

JUNE 2016 B1616361A